VRLA Rechargeable Battery

BP120-12

FEATURES

- Maintenance Free (topping up not needed)
- Non - spillable (no free electrolyte)
- Low Self Discharge, less than 3% per month
- both Vertical & Horizontal installations
- integrated Flame Arrestor at each cell
- Carry Handles for easy installation

APPLICATIONS

- UPS
- Telecom Systems
- Switch Boards
- Elevated Platforms
- Photovoltaic Systems
- Emergency Lighting
- Golf Carts

SPECIFICATIONS

Nominal Voltage	12 V
Nominal Capacity	120Ah @ 20 hour rate F.V.(1.75V/cell)
Approx. Weight	39.5Kg(87.1lbs.)
Terminals	B4 (Fitting M6 bolt & nut) I2 is optional
Internal Resistance	≦4mΩ (Fully Charged)
Max. Discharge Current	800 A (5 sec.)
Max. Charge Current	36 A
Operating Temperature Range	Charge : 0°C~40°C(32°F~104°F) Discharge : -20°C~50°C(-4°F~122°F) Storage. : -20°C~40°C(-4°F~104°F)
Container Material	Standard: ABS(UL94 HB) BP120-12 Optional: Flame Retardant ABS(UL94 V-0) BP120-12FR

MH19884

- IEC 60896-21/22
- JIS C 8704-2
- GB/T 19638.2

DIMENSION(mm/inch)

- **Length** 407±2.0 (16.02±0.08)
- **Width** 173±2.0 (6.81±0.08)
- **Container Height** 210±2.0 (8.27±0.08)
- **Total Height** 239±2.0 (9.41±0.08)

OUTER DIMENSIONS

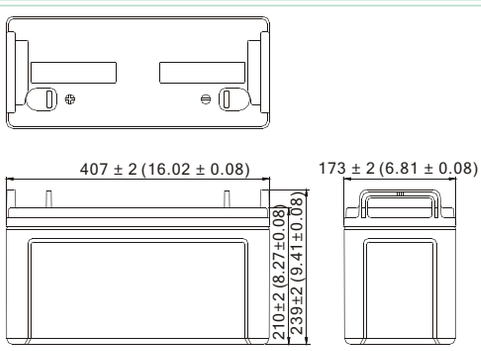

TERMINAL TYPE

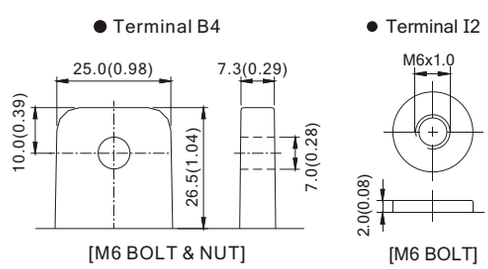

Terminal Hardware Initial Torque: B4,I2(5.5Nm 5%)

Constant power discharge characteristics at 25 °C/77 °F Unit: W

F.V. \ Discharge Time	15 Min	30 Min	1 Hr	3 Hr	5 Hr	10 Hr	20 Hr
10.8V	2346	1523	873.4	349.8	241.2	134.8	70.92
10.5V	2454	1581	899.6	356.8	244.8	136.8	72.00
10.2V	2530	1617	915.7	360.0	246.1	137.5	72.36
9.9V	2588	1640	926.7	362.5	247.2	137.9	72.58
9.6V	2640	1656	936.0	364.7	247.7	137.9	72.58

Constant current discharge characteristics at 25 °C/77 °F Unit: A

F.V. \ Discharge Time	15 Min	30 Min	1 Hr	3 Hr	5 Hr	10 Hr	20 Hr
10.8V	204	129	73.4	29.1	20.10	11.23	5.91
10.5V	213	134	75.6	29.7	20.40	11.40	6.00
10.2V	220	137	77.0	30.0	20.51	11.46	6.03
9.9V	225	139	77.9	30.2	20.60	11.49	6.05
9.6V	230	140	78.7	30.4	20.64	11.49	6.05

All data and artworks shall be changed without prior notice, BB reserves the right to explain and update the information contained hereinto.